ITEM	PART NO.	PART NAME	QTY
1	1183991	PREMIUM SUSPENSION FIXED DAMPENER (SHOCK ABSORBER)	1
2		BOX	1

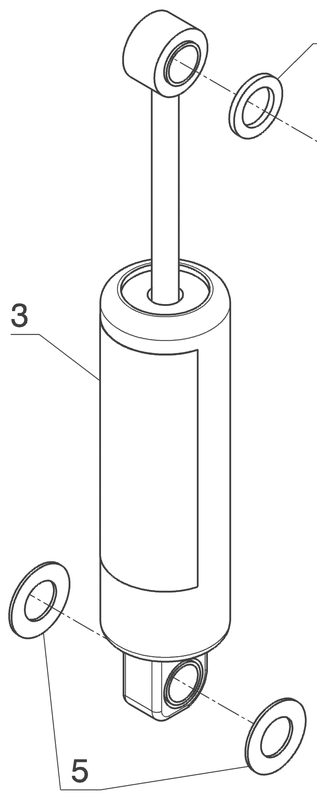

Pos.1 = Typenschild
Pos.2 = Poly-Beutel
Pos.1 auf Pos.2 aufgeklebt
Pos.3 - Pos.6 in Pos.2 verpackt

POS.1 = TYPE PLATE
POS.2 = PE-BAG
POS.1 PASTED UP ON POS.2
POS.3 - POS.6 PACKED IN POS.2

Spezifikationen /SPECIFICATIONS

Zeichnungsart DRAWING TYPE: EZ

Volumen (masserelevant) VOLUME (MASS RELEVANT): cm³

D-Kennzeichen D-SIGN | Z.-Nr. Kunde / Lieferant DWG.-NR. CUSTOMER / SUPPLIER | Kunde / Lieferant CUSTOMER / SUPPLIER | CATIA V5

Freimasstoleranzen nach / DIMENSIONAL VARIATION | PROJECTION METHOD 1 ISO 5456-2

Massstab SCALE 1:1 | Werkstoff MATERIAL / / / | Massnorm / SCALE NORM

	NAME	DATE
DRAWN	ED	23.05.08
CHECK	DER	02.06.08
NORM	HV	26.05.08
T-CHECK		

Benennung DESIGNATION: STOSSDAEMPFER KPL. / SHOCK ABSORBER CPL.

GRAMMER Seating Systems

Z.-Nr. 1183991 | Blatt SHEET 01 von OF 01

REV.	Feld SECT	Aenderung REVISION	Datum DATE	Name NAME	Gepr. CHK.
		L03-135-X	23.05.08	ED	DER

Ursprung ORIGIN: VF0003741 | abgel. von LIEF | Ers. für REPLACEMENT FOR | A 3

Massgebend ist der deutsche Text
ONLY THE GERMAN LANGUAGE VERSION OF THE TEXT SHALL BE BINDING

NOTE PROTECTION MARK AS PER ISO 16016 | Schutzvermerk ISO 16016 beachten

Version 2.1

exported by Serhat Diyaroglu on 14.02.2014 at 09:19:02

FRAME	CHG NO.	LET	REVISION	DATE	DRW	CK	APR
	7332	AA	RELEASED FOR SERVICE	01AP15	GAS	**	**

UNLESS OTHERWISE SPECIFIED DRAWING TOLERANCES ARE
LINEAR: ONE PLACE ± X.X; TWO PLACE ± X.XX
ANGULAR: ONE PLACE ± X.X °; TWO PLACE ± X.XX °

DIMENSIONING & TOLERANCING PER ASME Y14.5 M-1994

LAST VIEW / LAST SECT | 3RD ANGLE PROJECTION

COMPUTER GENERATED GRAPHICS
FILE NO. SEE PART BLOCK

– DO NOT SCALE THIS DRAWING –

DRAWN BY	DATE	CHECKED	APPROVED
INTENT	23APR12	**	**

THIS DRAWING IS COPYRIGHTED AND REMAINS THE EXCLUSIVE PROPERTY OF GRAMMC INTERNATIONAL. ANY UNAUTHORIZED COPYING, REPRODUCING OR OTHER MISUSE, IS PROHIBITED AND WILL BE PROSECUTED

UNLESS OTHERWISE SPECIFIED DIMENSIONS ARE IN MM

MATERIAL

GRAMMC truck interior systems

SCALE 1:2

NAME: ECONOMY SUSPENSION FIXED DAMPENER SERVICE KIT

NO: PAC-SP11879-DWG

PAC-SP11879-DWG

UNCONTROLLED