ITEM	KENWORTH PARTS	GRAMAG SERVICE KIT NO.
1	TRIM - KENWORTH	SEE DRAWING PAC-SP11981
2	FOAM - KENWORTH HIGHBACK	PAC-SP11245
3	FOAM - KENWORTH MIDBACK	PAC-SP11246
4	FOAM - KENWORTH CUSHION STATIC	PAC-SP11424
5	BACKFRAME - KENWORTH HIGHBACK	PAC-SP12126
6	BACKFRAME - KENWORTH MIDBACK FOLD FLAT	PAC-SP11425
7	ARMREST ASM LH KENWORTH	SEE DRAWING PAC-SP11811
16	BACKFRAME - KENWORTH MIDBACK FIXED	PAC-SP11251

ITEM	COMMON PARTS	GRAMAG SERVICE KIT NO.
8	FIXED BRACKETS - HIGHBACK	PAC-SP11980
10	CUSHION FRAME - STATIC	PAC-SP11421
11	BUCKLE - WITH WIRE	PAC-SP11924
12	BUCKLE - NO WIRE	PAC-SP11923
13	OCC SENDOR	PAC-SP11272
14	WIRE HARNESS - STATIC SEAT	PAC-SP11305
15	TOOLBOX BASE	SEE DRAWING S10-1013-00000
18	LID - UTILITY BOX	PAC-SP11838
19	TRAY, UTILITY BOX BATTERY	S06-1113
20	BOX - UTILITY	SEE DRAWING S10-1021-00000
21	RECORDS HOLDER	PAC-SP11825
22	ASM - STATIC RISER	SEE DRAWING S06-1114-000
23	ARMREST LOCKING BOLT AND CAP SERVICE KIT	PAC-SP11996

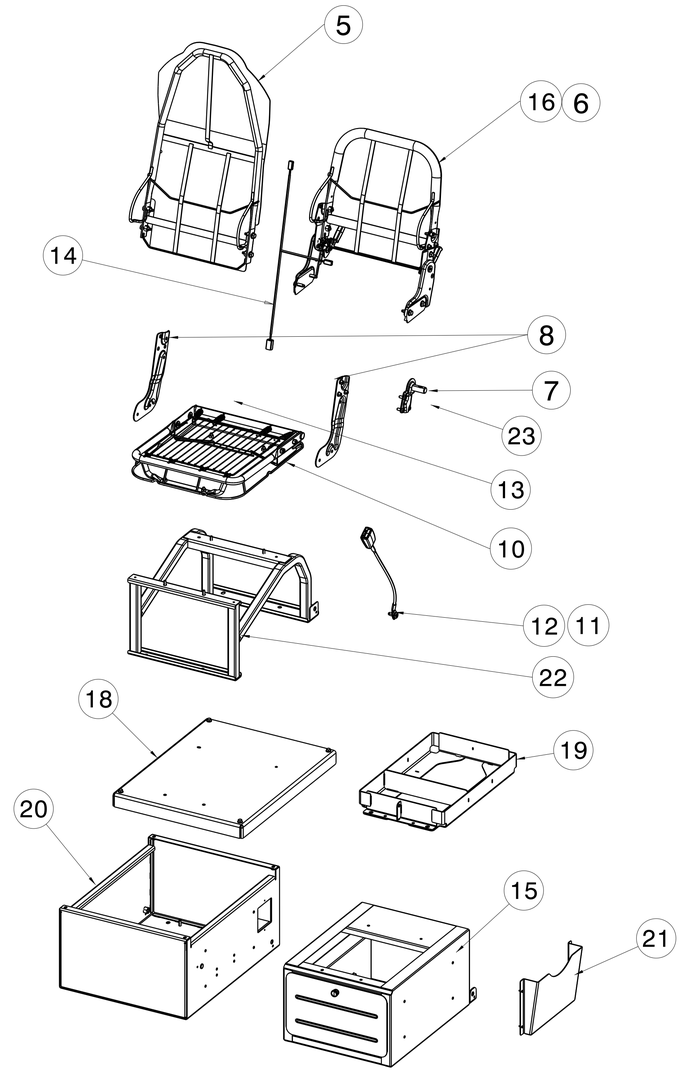

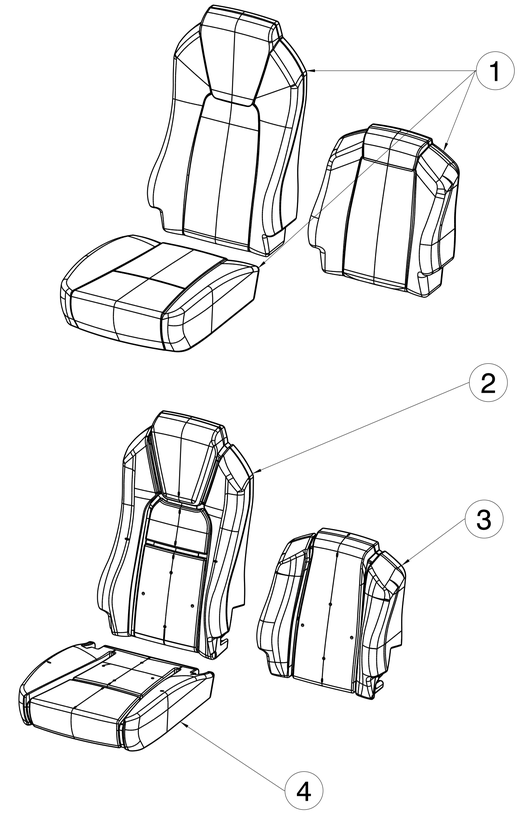

APPLIES TO KENWORTH PART NO'S:

S78-1077-000000000
S78-1133-000000000
S78-1178-000000000

FRAME	CHG NO.	LET	REVISION	DATE	DRW	CK	APR
	7465	DA	ADDED S78-1178-000000000; REMOVED PAC-SP11250, ADDED PAC-SP12126; REMOVED PAC-SP11299, ADDED PAC-SP11981	16APR18	BT	LF	••
	7404	CA	PAC-SP11924 WAS PAC-SP11428; PAC-SP11923 WAS PAC-SP11423; PAC-SP11305 WAS PAC-SP11429	02DEC16	BT	••	••
	7395	BB	ADDED KIT PAC-SP11996	19OCT16	BT	••	••
	7366	BA	RELEASED NEW FIXED BACK BRKTS; PAC-SP11980 WAS PAC-SP11422	12OCT15	BT	••	••
	7323	AH	ITEM 22 ADDED; ITEM 9 REMOVED	12OCT15	BT	••	••
	7319	AG	ITEM 21 ADDED; ITEM 9 UPDATED; ITEM 18 GRAMAG SERVICE KIT NO. WAS S22-1289	14NOV14	GAS	••	••
	7261	AF	REPLACED ARMREST KIT WITH LONGER ARMREST ITEM 7	28JAN14	INT	••	••
	7273	AE	ADDED KITS FOR UTILITY BOX, ITEMS 18-20; REMOVED ITEM 17	20JAN14	INT	••	••
	7262	AD	DRAWING REVISED	23OCT13	INT	••	••
	7240	AC	MOVED PIVOT COVERS TO KENWORTH ONLY CHART	10JAN13	INT	••	••
	7231	AB	ADDED VISUAL REPRESENTATIONS TO EXPLODED VIEW	19OCT12	INT	••	••
	7216	AA	RELEASED FOR SERVICE	30JUL12	INT	••	••

UNLESS OTHERWISE SPECIFIED DRAWING TOLERANCES ARE
LINEAR: ONE PLACE ± X.X; TWO PLACE ± X.XX
ANGULAR: ONE PLACE ± X.X °; TWO PLACE ± X.XX °
– DO NOT SCALE THIS DRAWING –

DIMENSIONING & TOLERANCING PER ASME Y14.5 M-1994
LAST VIEW
LAST SECT
3RD ANGLE PROJECTION
COMPUTER GENERATED GRAPHICS
FILE NO. SEE PART BLOCK

DRAWN BY	DATE	CHECKED	APPROVED
INTENT	08MAY12	••	••

THIS DRAWING IS COPYRIGHTED AND REMAINS THE EXCLUSIVE PROPERTY OF GRAMAG INTERNATIONAL. ANY UNAUTHORIZED COPYING, REPRODUCING OR OTHER MISUSE, IS PROHIBITED AND WILL BE PROSECUTED

UNLESS OTHERWISE SPECIFIED DIMENSIONS ARE IN MM

MATERIAL

GRAMAG truck interior systems

SCALE X

NAME: KENWORTH NGP GT100 STATIC SEAT ASM SERVICE KIT

NO: PAC-SP11419-DWG

PAC-SP11419-DWG

UNCONTROLLED